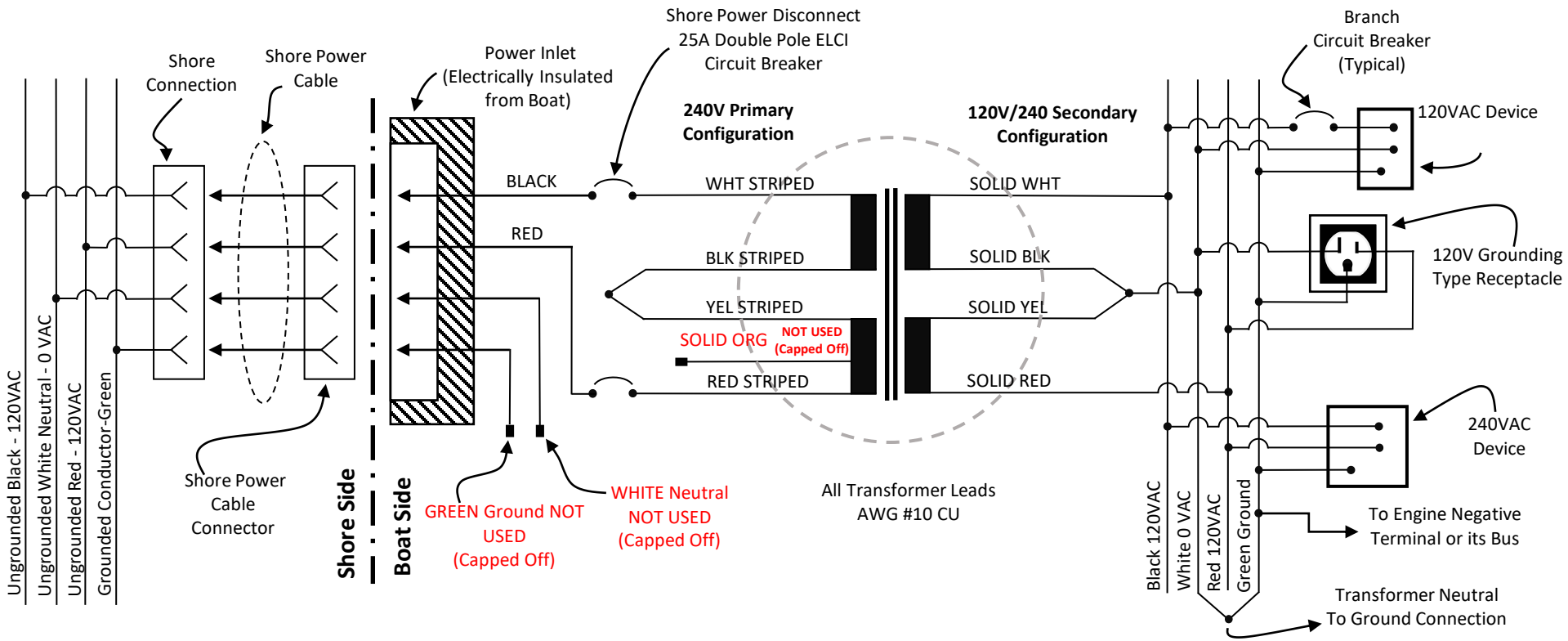240VAC / 120-240VAC