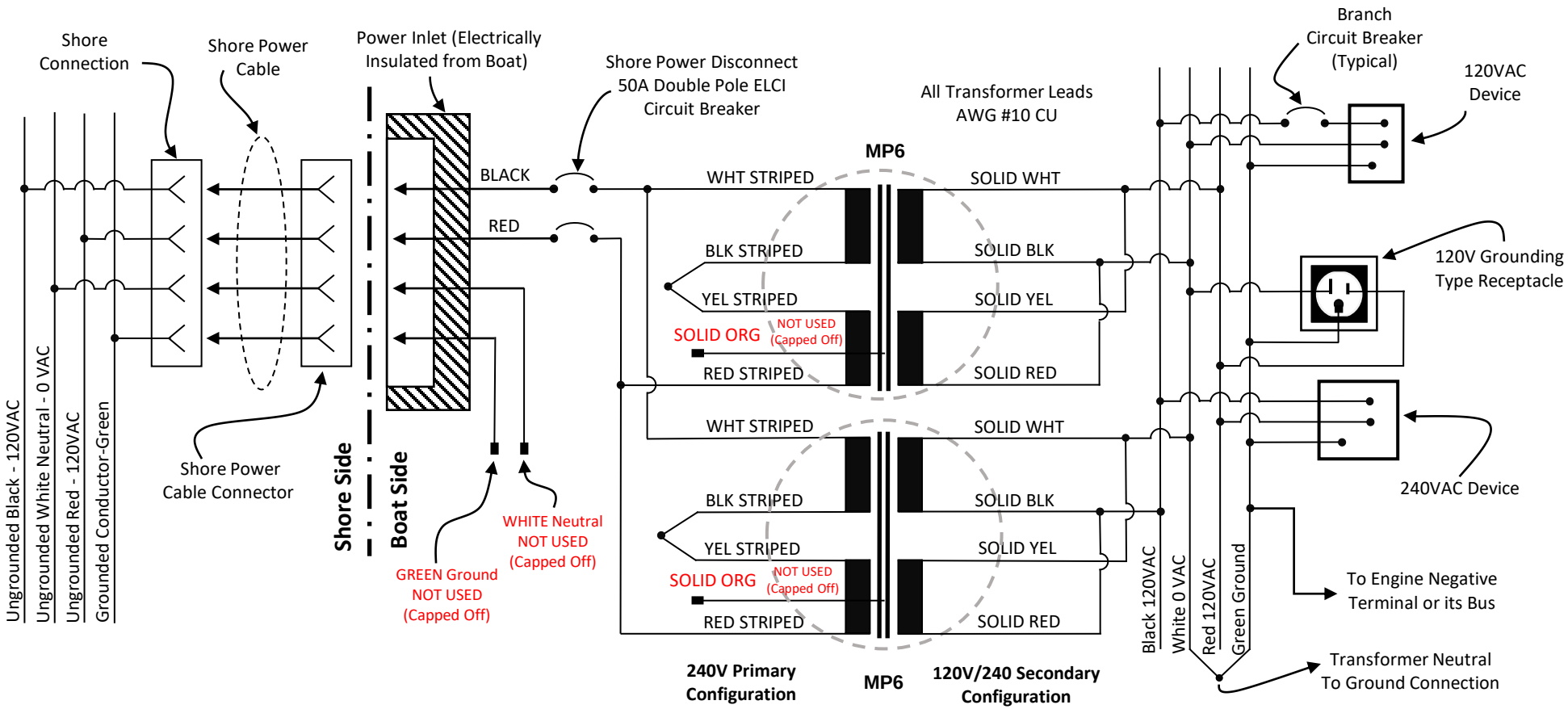DUAL MP6 - 240VAC / 120-240VAC 12KVA 50A